XQ SP CD-R

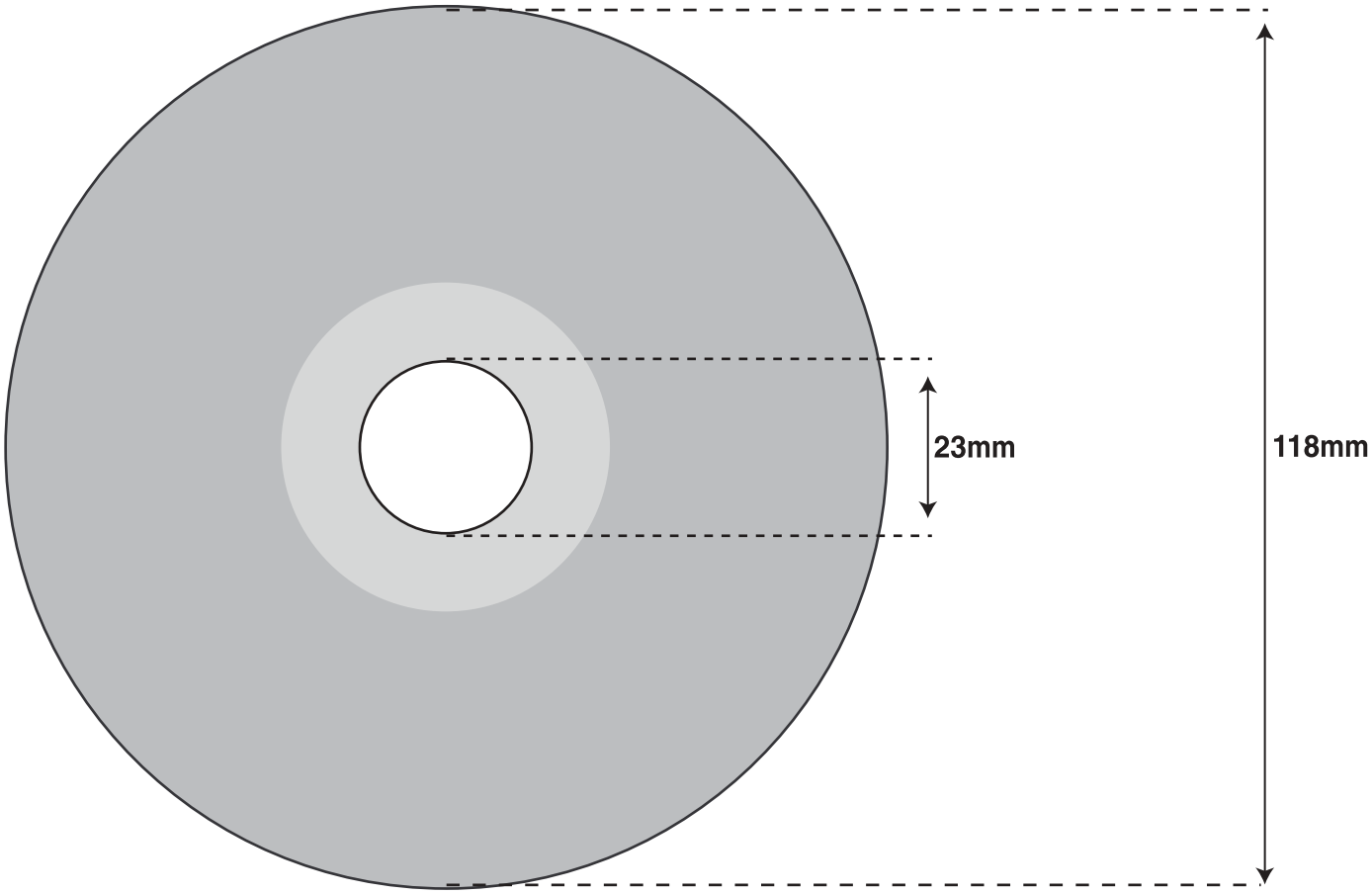

printable area

silver mirror band (44mm)

SPOT PRINTING - UP TO 5 COLOURS...

Film if Supplied :: Right Reading, Positive Emulsion UP
Recommended Minimum Type Size :: Positive 4pt, Negaive 6pt
Registration Marks :: One placed in Centre, 4 outside the Print
Keylines :: Remove all Keylines

HALF TONE PRINTING...

Screen Ruling :: 85/100 lines per inch
Dot Shape :: Round or Elliptical
Dot Density Range :: 12% - 90%
Screen Density:: 15% minimum, 85% maximum

Solid areas where possible, need to be placed on seperate film as the visocity of the ink for half tone and solid areas is differen

PROCESS PRINTING...

Screen Ruling :: 100 lines per inch
Dot Shape :: Round or Elliptical
Dot Density Range :: 12% - 90%
Screen Angles :: Cyan75, Magenta 45
Yellow 0, Black 15

Avoid Printing Large Solid Areas when Using 4 Colour Process

Digital Formats... 001

Mac or PC eps files, Quark Xpress 6,
Illustrator eps, Photoshop jpeg or tiff files
are the preferred formats

Saving your artwork... 002

Artwork should be supplied on
CD or Zip disk
Files can be supplied via e-mail
Attachments that are compressed using
Stuffit or Win zip which will
reduce the file size

Before you send your file... 003

Check that all typefaces are included
with the document on the disc
Ensure all fonts within eps or pdf are
embedded or have been converted to paths
Include all graphics and images used
in the document
Use CMYK not LAB or RGB colour models